TITLE: OBJECTIFYING AND PREDICTING MOTORCYCLE ACCIDENT RISK THROUGH RIDING DYNAMICS

Andreas Hula
Austrian Institute of Technology – Center for Mobility Systems
Giefinggasse 4, 1210 Vienna,
Austria

Klemens Schwieger
Austrian Institute of Technology – Center for Mobility Systems
Giefinggasse 4, 1210 Vienna,
Austria

Peter Saleh
Austrian Institute of Technology – Center for Mobility Systems
Giefinggasse 4, 1210 Vienna,
Austria

Manfred Neumann
TU Wien - Institute of Mechanics and Mechatronics, E325
Getreidemarkt 9, 1060 Vienna,
Austria

Horst Ecker
TU Wien - Institute of Mechanics and Mechatronics, E325
Getreidemarkt 9, 1060 Vienna,
Austria

ABSTRACT

The danger of motorcycle accidents is ubiquitous during the otherwise relaxing and enjoyable activity of riding a motorcycle. The consequences can be severe and the economic burden, both on the individual and the state, is high. Yet, when wanting to prevent such accidents, it can be seen that they are hard to predict, due to the high complexity of individual factors playing a role in each single accident.

To tackle this issue and extract generalizable characteristica of driving dynamics, the authors present the findings of "viaMotorrad", a project to obtain motorcycle dynamics data on selected roads in Austria and determine the risk of an accident at given road sections. This is a collaborative project by the Austrian Road Safety fund, between the partners Austrian Institute of Technology, TU Wien and KTM.

Through the use of supervised machine learning techniques we demonstrate that there are indeed generalizable factors in the driving dynamics at previous accident sites and use these factors to determine further critical road sections. These results are a first step towards an objectification of motorcycle driving risk and semiautomated risk assessment of roads for motorcycle riders. The method offers the possibility of identifying critical road sections through analysis of a small number of test drives.

INTRODUCTION

Within Europe, among road transport fatalities, a staggering one sixth are motorcycle riders or pillion passengers on a motorcycle. Our special focus, Austria, demonstrates an even higher number: the last 20 years have seen about 1850 motorcycle fatalities and about 66.500 injuries occurred nationally. The number of fatal accidents among motorcycle riders and passengers compared with the total number of traffic accident victims is also alarming: In 1992, the percentage of all fatalities was only 5.7%, while in 2017 a percentage of 20.0% set a new tragic record [1].

We identify two factors which evidently contributed to this outcome: Firstly, motorcycle safety had not been a primary concern compared to more common vehicles and improvements in the more general traffic environment (road layout, road conditions). Secondly, motorcycle use has increased substantially over the last couple of years (with both more registrations and more active use of motorcycles). While the total amount of motorcycle accidents is roughly constant [1], it appears that without specific measures for the safety of motorcycle riders, the otherwise declining number of accidents and fatalities for other vehicle categories will not be observed for motorcycle accidents, at least in Austria. This supports the need for a focus on the scientific study of motorcycle

accidents, since there is a multitude of possible causes in motorcycle accidents and these must be understood further reduce the risks that motorcycle riders face.

Illustrative results as well as the scope of the traffic safety project "viaMotorrad" will be presented in this paper. The underlying initiative aims to improve the safety of motorcycle drivers by collecting riding dynamics data. Following a study of previous accident data, combined with data of potentially critical locations based on the assessment by motorcyclists and focusing on frequently driven motorcyclists' routes in Austria, road sections were clustered and selected for a unique investigation performed with the newly introduced motorcycle probe vehicle, MoProVe [2]. The goal of the project was to identify high accident-risk spots within the road network, utilizing data collected by MoProVe. The method developed in this project offers a means to locate critical sections within the road network, in order to carry out safety measures to reduce motorcycle accidents and injuries.

Ultimately, the intended outcome is to provide a hazard map of motorcycling dynamics for the selected roads. This map will be part of a general effort to objectify the potential safety impact for motorcyclists on the track. The hazard map could then be prepared for far more extensive road networks in the future. This could yield a priority ranking of road sections in terms of driver safety/risk and necessary steps to be taken to increase road safety for bikers.

The selection of the type of tracks and the individual motorcycle riders who helped to obtain training data for our method introduce natural limits of generalizability. However, an expansion of the data base to more drivers and yet more diverse tracks will be a means to reduce a potential bias in the future. Our result is that generalizable features in the driving dynamics around the locations of previous accidents can be learned by a supervised machine learning algorithm. This is a first step towards objective assessment of motorcycle accident risk locations through driving dynamics of multiple bikers on the same track.

MATERIALS AND METHODS

The project team was kindly provided with a motorcycle by KTM Sportmotorcycle GmbH (KTM) [3] and this motorcycle was equipped with special measurement systems by the TU Wien (TUW) and the Austrian Institute of Technology (AIT). The measurement systems gather all available driving dynamics data for the purpose of later analysis. The vehicle has a normal road approval, so that measurements can be undertaken under normal traffic conditions.

For the purposes of the project, the measurement vehicle had to fulfill a number of criteria: It should be equipped with modern on-board measurement systems, to provide an extension of the data collection of the externally added systems. Furthermore, it had to be user-friendly and provide access to the internal hardware and software features.

The KTM 1290 Super Adventure (see Figure 1) fulfilled all requirements. The motorcycle is powered by a 1300cc V-twin engine, mustering 160 HP (horse power) and a maximum torque of 108 Nm (Newton meter). Its dry weight is 222 kg. This machine provides a multitude of onboard systems such as Motorcycle Traction Control (MTC), Motorcycle Stability Control (MSC), Combined-ABS (C-ABS), Motor Slip Regulation (MSR) and a semi-active suspension system (SCU). These are dependent on numerous sensors, such as several brake pressure gauges, wheel speed sensors, a throttle position sensor and many more. System data is obtained via the vehicle CAN-bus, in addition to being collected and processed by separate data recording systems. Another advantage of this machine is the option to activate or deactivate assistance systems (i.e. the motorcycle offers to select different riding modes). This would make it possibly to imitate a more basic motorcycle, without additional features.

Figure 1. KTM 1290 Super Adventure equipped and instrumented as a Motorcycle Probe Vehicle (MoProVe).

Measurement systems

We illustrate the two main measurement systems that are available in the test motorcycle. Both systems contain a data logger, IMUs (Inertial Measurement Unit), additional sensors and interfaces to the vehicle's CAN-bus. There was some redundancy between the data acquisition by the independent IMUs.

Below, we present the two systems separately and compare the quality of their output within the experiment.

System B (Blue): The blue system is comprised of hard- and software by RACELOGIC [4], with the main component being a VBOX 3i dual-antenna data-logger. This VB3iSL is depicted in Figure 2 (a) besides a functional block diagram of its components in Figure 2 (b).

(a) (b)

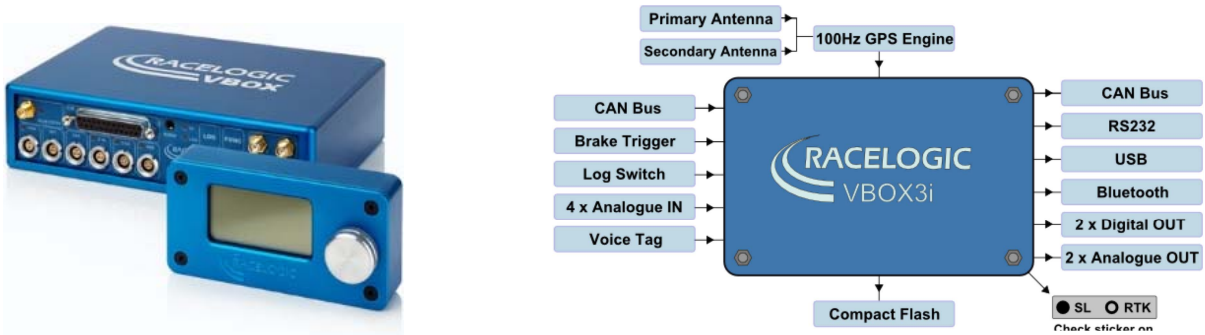

Figure 2. Picture of RACELOGIC data-logger VB3iSL with display unit; (b) Block diagram of Input and Output signals for data-logger VB3iSL (VBOX automotive, 2017).

A high-performance GPS engine employing twin antennas capable of providing a 100 Hz (Hertz) signal update rate for all GPS / GLONASS parameters is available on the VB3iSL. From the Doppler Shift in the GPS carrier signal both heading and velocity can be calculated with high accuracy. Additionally, the VB3iSL tracks the Russian GLONASS range of satellites. This benefits the system in that there are nearly twice as many satellites in range and thus the system maintains a stable satellite lock in places where GPS-only reception can lead to failures in data acquisition. With two GPS / GLONASS antennas simultaneously in use, measurements of signals such as slip angle, pitch or roll angle, yaw rate, true heading, lateral velocity and longitudinal velocity are feasible.

The quality of the system output is improved by two additional features. A DGNSS (Differential Global Navigation Satellite System) Base Station was included to further enhance the accuracy of positional measurements of the VBOX unit, through the use of differential correction data. Utilizing the additional signals from a Base Station, with a known fixed position, the difference between this known position and a position received via GPS/GLONASS can be accurately monitored. This correction signal can then be used to significantly improve the accuracy of the absolute position. While the 95% CEP (Circular Error Probable) is 3 meters for standard position measurements, the DGNSS-station allows a radius of 80 cm (centimeters) to be achieved.

Although the relative position accuracy is higher than the absolute position accuracy, it is yet further improved by an Inertial Measurement Unit (IMU, see Figure 3): The sensor on the MoProVe is a 3-axes accelerometer with additional 3-axes measurement of the angular rate. Through numerical integration of the measured signals, linear velocities and distances as well as roll, pitch- and yaw-angles can be calculated. Combining these postprocessed IMU-signals with the information provided by the GPS-antennas, numerical algorithms implemented in the system software can optimize the system output and return highly accurate position and velocity signals. This enables the system to continue its measurements at locations with weak (or no) GPS/ GLONASS satellite signals, e.g. in tunnels, as the system can rely on the IMU data.

(a) (b)

Figure 3. a) Picture of RACELOGIC Full HD camera system; (b) Inertial Measurement Unit (IMU) to measure 3-axes accelerations and 3-axes angular rates (VBOX automotive, 2017).

System R (Red): The other data acquisition system implemented on MoProVe is a measurement system specifically designed for motorcycle applications, while System B has been developed with a focus on application in automotive engineering. System R is called the 2D ([5], Debus and Diebold) system and it is a popular system with motorcycle racing teams worldwide. On MoProVe, it provides a supplement data source to the other system as the focus and features of this system are different from System B.

System R provides a data logger with dashboard display unit, a single GPS-antenna and two 6-axes IMUs, allowing it to be used as a stand-alone system in principle. With respect to these components, there is a functional redundancy provided by both systems. However, system R is more reliable and capable when it comes to the measurement of vehicle parameters. The logger of the 2D-system can record on up to 200 channels, with the sampling rate being as high as 3.2 kHz. The system provides 2x8 analog input channels with 16 bit (high-resolution) ADC (Analog to Digital Converter) available, several dedicated wheel speed input channels and two independent CAN-lines with full CAN routing [5]. Moreover, the logger and components are small in size, low in weight and robust, with low power consumption.

Comparison of Systems B and R: System R provides more flexibility than system B, since the sampling rate of system R is higher and therefore more accurate data is obtained. Also, more channels are available in system R. In addition to that, access to the motorcycle's CAN-bus system is easier with this system and many CAN signals can be recorded. To add to the already high number of sensors and signals accessible on the KTM bike, a separate steering angle sensor was also installed and its signal was sampled. Examples of measurable signals are Wheel speed signals, brake fluid pressure, throttle position, engine speed, gear position and brake operation.

For the purpose of measuring acceleration signals and angular rates, system R is superior to system B since two lightweight 6-axes IMUs provide data and the sampling rate can be set as high as 3200 Hz. Therefore, it can be seen that in-plane dynamics of the motorcycle, as well as stability and detection of unstable behavior, steering maneuvers, etc. are best studied by using system R.

The technical elements of system R are placed in a side case on the right hand side of the bike, while another side case on the left hand side is used for system B. Positioned at the very end of the luggage bridge, an aluminum "sensor bar" was placed, to hold all 3 GPS-antennas and the IMU of system B. Below the seat, the IMU of system R could be found, in the form of a tiny red box. The additional IMU of system R was contained in the GPS-antenna mounted on the sensor bar.

Measurements

The measurements were performed by experienced but not professional or trained test riders. We could not include new/amateur drivers as the measurement runs and tasks would have been very hard on a novice and we also could not risk the MoProVe being damaged. The authors acknowledge that the quality of the results also hinges on the number of test drivers and diversity of the observed driving dynamics. For this project, the stated aim was to investigate the feasibility and the possible quality of revealing motorcycle accident risk from driving dynamics. Thus, it would be essential that the method would yield instructive results without needing a huge amount of measurement data from many riders and that it could be applied even on a small statistical base of the sampled data.

Data was obtained on all selected road sections by each rider, several times. This turned out to be a crucial feature towards stable results, in that an "average ride" for each rider could be calculated and single events could be removed from the classification of the elements of the road section. Test rides took place during normal traffic hours and in a considerable number of rides it was necessary to eliminate events such as an overtaking maneuver or a hold-up behind an agricultural vehicle.

Six tracks in lower Austria and Styria were included in our study. We got access to single driver and frontal collision accident site data for all tracks dating from the year 2012 to the year 2015.

We used the smoothed (via a rolling average with a window of 60m) data of 9 dynamic variables (including X-, Y- and Z- accelerations, Yaw-, Roll- and Pitch-Rates) and their approximate derivates to set up our model.

Model

In a first step the obtained time-based data of the dynamic variables was transformed into location-based data for the 6 tracks under consideration (see [6] for details).

Our model (patent pending) itself is based on 3 core steps:

1. Determining "default" dynamics (common and/or averaged values) and extracting dynamics at known accident sites [7]. We smooth the location-based dynamics data by computing a rolling average of neighboring values, rather than the raw dynamics data.
2. Calculating a separation between the normal dynamics and the dynamics at accident sites [8], then using this difference to assign a value to each meter and using values at the accident sites to determine a limit value for each driver, [9][10].
3. Creating an overlay across all test drives, of transgressions of the limit values and determining the local maxima of a smoothed version of the resulting "warning surface" along the track.

We then consider the obtained local maxima as warning points along the studied tracks and assign to each of them a range of 100m in either direction (based on an assumed speed of about 70 km/h, and then assuming the "run up" and consequences of an accident may account for several (5) seconds of "influence" on the dynamics of

the recorded accident site), in which we consider driving dynamics to being potentially related to the observed maximum (dubbed the "Warning Area" around a maximum).

See Figure 4 for a schematic representation.

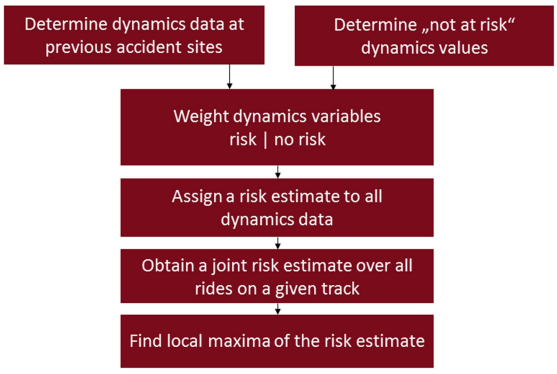

Figure 4. Summarized steps of the algorithm (from top to bottom).

An accident site is then considered to be "included", if it is within the 100m area of a local maximum.

RESULTS

We fit our model according to the accident site data and driving dynamics of the 6 included tracks. We illustrate the outcome on the "Kalte Kuchl" track in Austria (Figures 5 and 6 below).

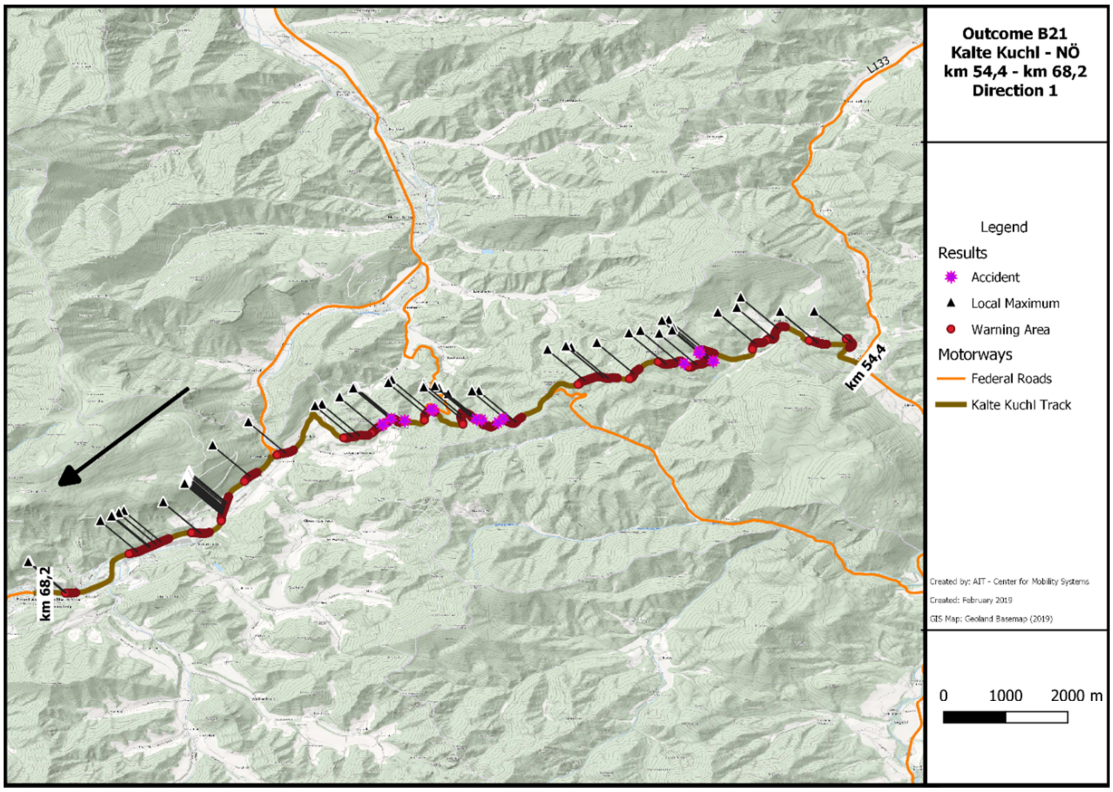

Figure 5. Kalte Kuchl track in Austria. Accidents (black stars), local extrema (tags) and extrema surrounding areas (red). Map created in QGIS 3.4. Driving direction is E to W, note arrow on the map.

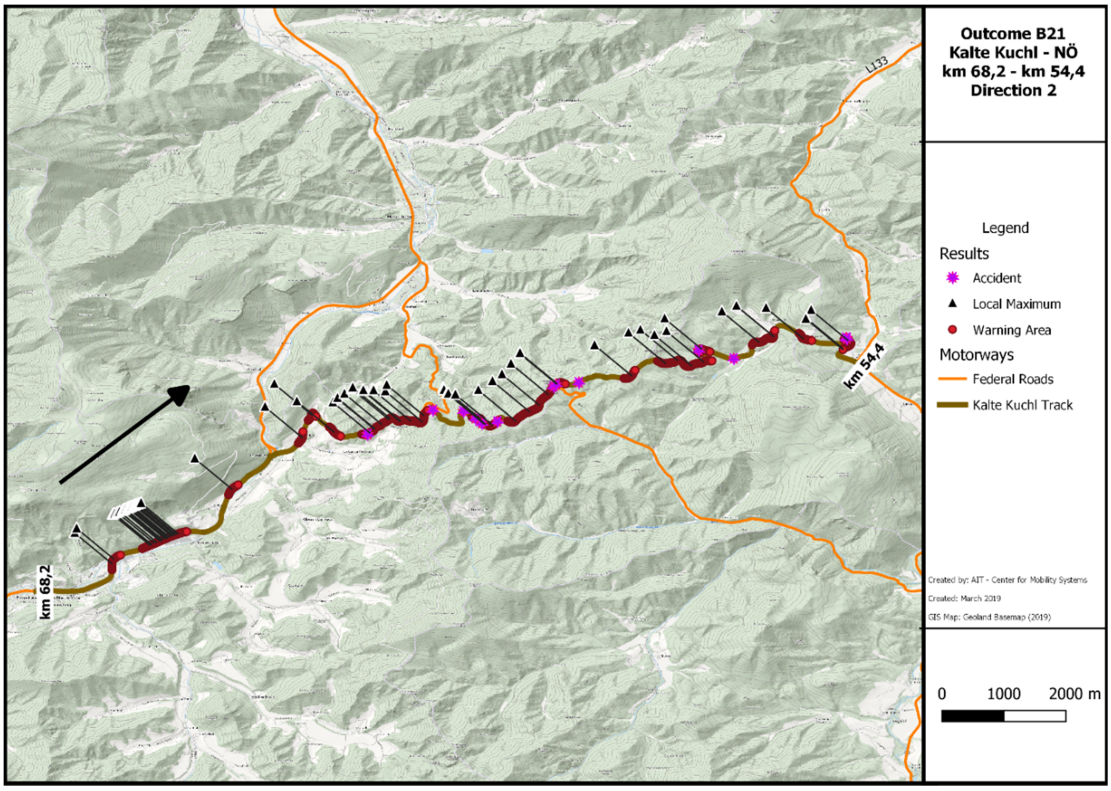

Figure 6. Kalte Kuchl track in Austria. Accidents (black stars), local extrema (tags) and extrema surrounding areas (red). Map created in QGIS 3.4. Driving direction is W to E, note arrow on the map.

Our solution hits 60% of actual accident sites, in a domain that is 35% of the total track length. The overall quality of our solution can be seen in Table 1.

Table 1.

Percentage of Accidents found and Total Area Covered

	Kalte Kuchl	All Tracks
Percentage Covered	45%	35%
Included Accidents	31	90
Percentage Accidents Included	74.2%	60%

Overall, we manage to include a substantial part of the known accident sites, while "covering" 35% of all tracks lengths. The Kalte Kuchl track specifically shows a high percentage of accident sites found, but also a larger proportion of covered areas. This is largely due to the high amount of serpentine shaped parts on the Kalte Kuchl track.

CONCLUSIONS

We present a model capable of identifying locations of locally heightened accident risk, by comparing test driver dynamics data to driving dynamics of the same drivers at given accident sites and overlaying the results of multiple drivers along the given track.

Given the primary locations of our local maxima (serpentine shapes and sharp curves), we conclude that the found locations are not random and the model manages to generalize hidden properties of at least a major portion of these accident sites.

We note that there are a number of maxima in the left area of Figures 5 and 6, even though no accidents have occurred there so far. Currently the method does not differentiate between "high level" local maxima (for instance local maxima with more than 50% of testdrives showing a limit value transgression) and "low level" local maxima (for instance local maxima with less than 20% of testdrives showing a limit value transgression).

We note that the local maxima in the left (western) part of the track would all be of the “low” type i.e. arising from only a small percentage of limit value transgressions. Making a difference between these two types of local maxima should further improve the quality of the predictions made by the method.

We are able to identify at least one potential spot of dangerous dynamics: The sharp-tipped curve that separates the left low-risk domain from the right high-risk domain. No accidents occurred there in recent years, but the observed dynamics are similar to the known accident sites used to fit the model.

We treat single person accidents and frontal collisions in this example. We used the dynamics and accident sites of a popular motorcycle track as basis to fit our model. The outcome of 60% accidents hit in 35% of the tracks covered suggests that there are objectifiable similarities in the driving dynamics occurring in at least a sizeable subset of observed accident sites.

Our results show, that the driving dynamics of multiple drivers provide a feasible means of objective identification of points of motorcycle accident risk, since we are able to include a considerable proportion of accident sites across 6 different tracks.

Limitations include the need to extend the available data and validate our findings more generally on tracks not currently related to the model. We note the need to provide a diverse and representative sample of motorcycle tracks and possibly driver types, in order to extract more robust and generalizable results. We also do by no means claim, that *all* motorcycle accidents, or even just single person motorcycle accidents, would be related *exclusively* to driving dynamics. Rather, we wish to contribute a certain level of predictability and generalizability to the difficult problem of identifying risky or dynamically demanding motorcycling locations.

Possible future applications include the identification of road infrastructure needs for motorcycle safety, based on the locations revealed by our algorithm.

Acknowledgements

This research was partly funded by the VSF Austrian Road Safety Fund [11]. The authors are grateful for the financial support.

KTM Austria [3] generously provided the motorcycle used in these studies.

The authors would like to thank (in alphabetic order) Matthias Hahn, Till J. Kniffka, Johann Schindele and Peter Unterkreuter for their significant support in instrumenting, adapting and riding MoProVe. We would also like to thank Stephan Wittman and Alexander Genser for the creation of QGIS templates and the preparation of geospatial data, used in the project.

References

[1] Statistik Austria 2017

[2] Ecker, H. and Saleh, P. 2016. "MoProVe - A Probe Vehicle for Traffic Accident Research", EVU Proceedings 25th Annual Congress, EDIS - Editing Centre of University of Zilina, ISBN: 978-80-554-1260-3; S. 29 – 41

[3] KTM Sportmotorcycle GmbH

[4] VBOX automotive, VBOX 3i Dual Antenna | 100Hz Vehicle Dynamics Measurement

[5] 2d-datarecording, 2D Debus & Diebold Messsysteme

[6] Schwieger K., Saleh P., Hula A.; Ecker H. and Neumann M.,2018. “viaMotorrad – Can motorcycle safety be measured?” ,12th International Motorcycle Conference Cologne

[7] McLachlan, G.J. 1988, "Mixture Models: inference and applications to clustering", Statistics: Textbooks and Monographs, Dekker

[8] Duda, R.O., Hart, P.E. and Stork, D.G. 2001. "Pattern Classification", Wiley, New York

[9] Draper, N.R. and Smith, H. 1998“Applied Regression Analysis”, Wiley, New York

[10] Seber, G. A. F. and Wild, C. J. 1989 „Nonlinear Regression", John Wiley and Sons, New York

[11] VSF Austrian Road Safety Fund