Updated Estimates of Potential Traffic Fatality Reductions With Automatic Collision Notification

Jingshu Wu, PhD, PE
Matthew Craig, PhD
Anders Longthorne

National Highway Traffic Safety Administration (NHTSA), Washington, DC

Paper Number 15-0269

ABSTRACT

This paper updates the earlier work done by Wu, Craig, et al. (2013) that explored the effects of earlier emergency medical services (EMS) through Automatic Collision Notification (ACN) on passenger/driver survivability using Fatality Analysis Reporting System (FARS) 2005-09. In this continuing study the earlier results are updated using recent FARS 2009-2012 data, while additional factors together with ACN are also considered: such as EMS arrival, time to hospital, urban/rural location comparison, occupant age and correlation between EMS factors. Kaplan-Meier estimator is applied to compare the survival rates between two conditions (e.g., earlier versus late EMS notification); Proportional hazard model explores simultaneously multiple risk factors related to traffic mortality. Correlations between notification and EMS arrival are explored and especially in rural area. Based on FARS data from 2009-2012, Kaplan-Meier life curves clearly show the benefits associated with earlier notifications within 1-2 minutes (approximately 1.5-2.0% fatality reduction within a timeframe of 6 hours after crash) and earlier arrivals. The relative hazard ratio associated with collision notification, location and age are obtained from a multiple regression model, and the relatively higher fatality hazard (up to 4% higher) is associated the later notification of more than 2 minutes. This paper obtains the driver/passenger survival probability differences over time under different conditions of collision notifications, EMS arrivals, time to reach a hospital, and crash locations, furthermore, this analysis provides the estimations of lives that could potentially be saved (177 to 244 per year approximately) due to earlier crash notification, or Automatic Collision Notification (ACN).

1. INTRODUCTION

During 2009-2012, the Fatality Analysis Reporting System (FARS) data indicate that the traffic fatalities are approximately 33,000 per year in US (33,883 in 2009, 32,999 in 2010, 32,479 in 2011, and 33,561 in 2012, respectively), and approximately 83%~85% fatalities were from drivers and passengers each year. It has been a challenging effort to reduce the traffic fatalities, especially the target study population of drivers and passengers in light trucks and cars under 10, 000 lbs. by all possible means and new techniques. Automatic Collision Notification (ACN) system is one of such efforts and it has been available from some automobile manufacturers since the late 1990s. One benefit of these ACN systems may enable the injured occupants to inform the emergency response personnel quickly about location of a car crash.

Many prior publications have attempted to document the potential motor vehicle crash-related fatalities that could be reduced given ACN. Wu, Craig, et al. (2013) [1] explored the effects of earlier emergency medical services (EMS) through ACN on passenger/driver survivability. It was found that 154 to 290 additional lives per year (approximately 1.8% fatality reduction) could be saved by earlier collision notification times that could result from the presence of ACN systems in passenger vehicles and light trucks and vans. The earlier study used 2005 through 2009 Fatality Analytical Reporting System (FARS) data. The vehicle fleet, communication technologies, and other factors related to occupant safety may have changed in the past few years, and the potential fatality reduction estimates should be re-computed in the light of this changing vehicle fleet, communication technology, and mainly

notification status. This updates estimates for potential annual lives saved by ACN using FARS 2009-2012 data, and additional factors together with ACN are also including urban versus rural crash location and occupant age.

Earlier studies were carried out by various researchers. In one study with a relatively small fleet of vehicles equipped with ACN, Kanianthra et al. [2] documented that EMS providers received notifications within two minutes of the crash in all cases while 20% of non-equipped vehicles took over 5 minutes, their study estimated that 240 to 765 lives could be saved. Using similar survival analysis approach, Clark and Cushing [3] estimated the potential benefits of ACN through analysis of 1997 FARS data. One of their models matching FARS fatalities estimated a total annual reduction of 421 fatalities (1.5%). The European Commission's 'eCall' program [5] published a final report regarding its crash notification related efforts (European Commission, 2009). The estimated motor vehicle crash occupant fatality reduction with ACN in the cited studies ranged widely from 1% to 12%.

Existing research has not yet dealt with the relative comparisons of different conditions statistically with sufficiently larger data sizes and significant P-values, for instance, to compare earlier versus later notification outcomes or earlier versus later arrival outcomes. Some relatively older data (FARS 1997) may not reflect today's EMS call status well [3], and the work done by Toyota [6] have provided clear comparisons of notification and arrival times for scenarios with and without ACN, but also proposed prior assumptions of the possible correlations between EMS notification, timeliness of arrival, and survivability. Correlations among EMS factors were rarely mentioned. While the authors are inspired by the earlier research[2-6], efforts are still needed to understand the following:

- Impact of earlier or automatic collision notification on occupant survivability and the potential for fatality reduction with ACN if introduced across the passenger vehicle fleet;
- Survival rate comparisons of varied EMS arrival times including the impact of earlier EMS arrival on survivability, and the impact of shorter time to reach hospital;
- Comparison of EMS response time and survivability in rural versus urban areas;
- Correlations between EMS factors, such as notification time versus arrival time; and
- The relationship between the traffic fatality hazard with several risk factors, including later notification, rural area, and older age, simultaneously.

Earlier crash notification, with timely EMS and earlier hospitalization, may all play a significant role in mitigating the effects of the injuries suffered in a motor vehicle crash. Research [11] has also indicated that proximity to advanced trauma care (earlier EMS and shorter distance to hospital) may also be a key factor in mitigating injury outcome. Since time is of essence in EMS response to such situations, driver/passenger survival rates can vary significantly between different time conditions (e.g., time elapsed before or after the notification call). This could possibly be exacerbated in the case of single vehicle crashes in the remote rural areas where a lone occupant of a vehicle may have lower likelihood to call and receive emergency services, especially within a short time frame. In this paper, the techniques of 'time-to-event', such as Kaplan-Meier estimator and Cox proportional hazard model, are used to address the time effect. This study explores the relative comparisons between different conditions or groups, such as survival rates with earlier notification versus late notification, and survivability in rural areas versus urban areas.

2. DATA AND STUDY DESIGN

EMS is most helpful to the drivers and passengers of passenger cars and light trucks if received within 6 hours immediately following a crash.[1,2] Data was compiled using the 2009-2012 FARS data, with specific evaluation of the 6-hour post-crash timeframe (EMS notification/arrival within 6 hours after crashes; data with missing notification/arrival information was excluded). Data cleaning efforts (defining times of notification, arrival, death, and missing data, et. al) were made in FARS data verification, and all key time variable coding were defined by the authors of NHTSA. For each crash coded in FARS, the following times are recorded: *crash*, EMS *notification*, EMS *arrival at scene of crash*, EMS *arrival at hospital*, and *time of death* (in the event of a fatality, see Figure 1 for definitions of time events and time intervals).

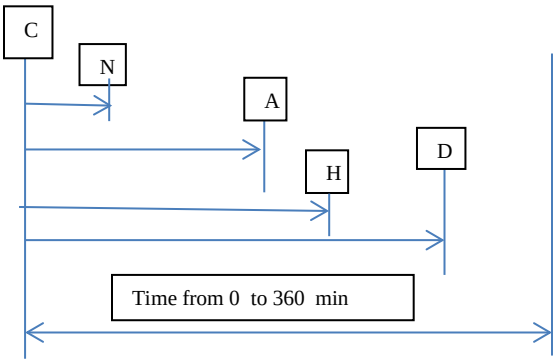

Figure 1: Crash time events and time elapsed between crash (C), notification (N), arrival (A), Hospital (H), and death (D).

These time-date values were used to generate the time intervals needed for the time-to-event or survival analysis. Note that only crashes with available notification and arrival times within six hour window after crashes were used. See Figure 2 for the data flow chart for this study: there were 88,703 fatalities and 29,916 incapacitating injuries under considerations (drivers and passengers in cars or light trucks), 68,043 of them died within 6 hours, and 33,125 fatalities were associated with known notification and arrival times (approximately 48.7% of the 68,043 fatalities within 6 hours, see Figure 3), and 9,873 of 33,125 people died instantly for whom ACN is of no help (crash to death time = 0), and the remaining 23,252 fatal cases are the research sample. They are matched with 24,812 cases of 'Incapacitating Injuries' within the same time frame of six hours as described as Table 2.

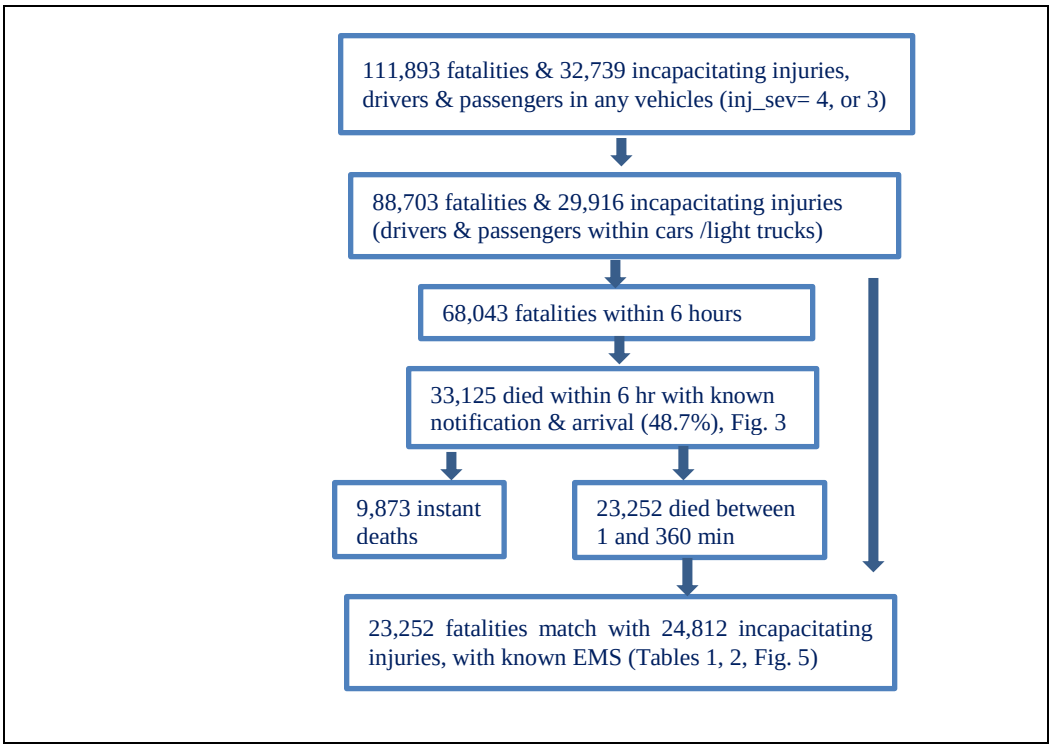

Figure 2: FARS 2009-2012 Population Study Sample

Table 1 shows the statistical descriptive summary for 23,252 fatalities that occurred from 1-360 minutes post-crash who were also associated with known notification and arrival time within six hours (overall, rural, and urban data). The definitions of rural and urban areas are from US Census Bureau.

Table 1: Overall, Rural and Urban EMS Response Times (minutes) Since Crash (FARS 2009-2012)

Overall 23,252 Fatalities Within 6 Hours with Known Notification/Arrival info		
Time	**Mean (min)**	**Std dev (min)**
Call	6.24	17.33
Arrival	16.74	20.29
Death	66.21	67.99
Rural 14,294 fatalities within 6 hours (61.5% of 23,252 fatalities)		
Call	7.25	19.16
Arrival	19.64	22.25
Death	66.46	67.05
Urban 8,924 fatalities within 6 hours (38.4% of 23,252)		
Call	4.61	13.74
Arrival	12.10	15.63
Death	65.74	69.41

FARS database used the key injury variable of '*inj_SEV*' to indicate injury severity as follows: 0 = No Injury; 1 = Possible Injury; 2 = Non-Incapacitating Evident Injury; 3 = Incapacitating Injury; 4 = Fatal Injury; 5 = Injured, Severity Unknown; 6 = Died Prior to Crash; and 9 = Unknown. In this study, two groups of 'Incapacitating Injury, 3' and 'Fatal Injury, 4' are focused, since these two groups need EMS help immediately, and is compared with 'Fatal Injury' group within same time window, for example, within 6 hours after crashes.

Figure 3 shows the fatalities over time (inj_sev=4). This fatality curve, or survival probability curve over time, S(t), indicates that approximately *86.6%* of fatalities occurring within 6 hours occurred within 100 minutes of the crash (including 9,873 instant deaths at time = 0). More details of this life curve will be discussed later using Kaplan-Meier Estimator [7]. Additionally, 20,083 died within 40 minutes since crashes (approximately 61% of all fatalities within 6 hours).

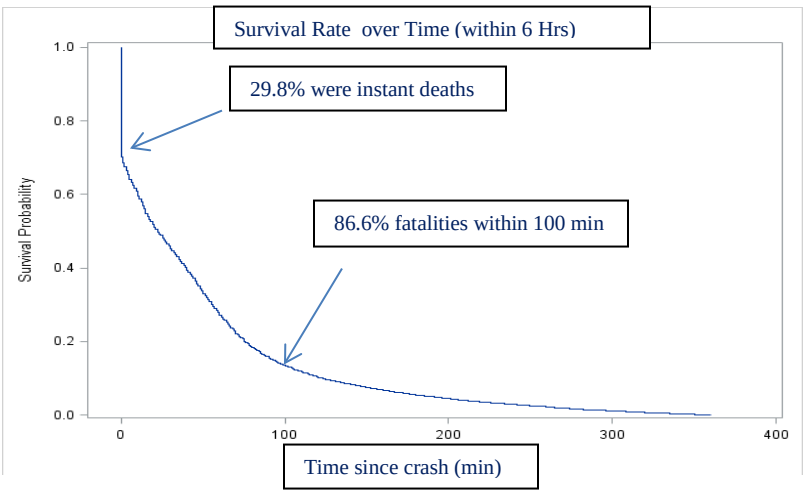

Figure 3: Survival rate, S(t), versus 'crash to death time' of fatalities within 6 hours (33,125 with known notification /arrival times, data from Figure 2).

For the purpose of analyzing the survival rate or proportion, the data set in this study includes the crashes that resulted in at least one fatality, and should not be generalized to the whole crash population. The values of 'inj_SEV=3, 4' are used as the study population, since these two categories need EMS help most while instant fatalities are excluded. There were 24,812 'Incapacitating Injury' cases (inj_Sev=3) that were matched with 23,252 fatalities (inj_SEV=4, within 6 hours after crashes and with known EMS information) in this *cohort study*, or

follow-up study [9] as described by Table 2, which compares the subsequent occurrence of traffic injury severities between two groups whose EMS status differs. Fatality rate of 'earlier group' is R_e = A/(A+B), and R_L = C/(C+D) for 'later group', and the fatality relative risk (RR) is (R_L /R_e). The survival rate S(t) = (100% - Fatality Rate) over time, t.

Table 2: Cohort Study of Notification versus Traffic Severity within 6 Hours After Crash (inj_Sev = 3, 4)

Notification	**Fatal, Inj_Sev=4**	**Inj_Sev= 3**	**Total**
Earlier	A	B	A+B
Later	C	D	C+D
Total	23,252	24,812	48,604

3. SURVIVAL RATES WITH DIFFERENT EMS STATUSES

Various factors or EMS statuses may affect traffic fatalities: such as notification time, time of EMS arrival at the crash scene or time of EMS arrival at hospital. Furthermore, EMS services (notification, EMS arrival, et. al., as Table 1) in rural versus urban areas are also rather different. Time plays a very crucial role in life saving. All these issues will be explored in this section.

One of the most useful tools to compare the survival probability over time, S(t) (e.g. Figure 3), for each minute after crash, is a non-parametric method proposed by Kaplan and Meier that is used widely for medical research and reliability engineering [1 7]. The Kaplan-Meier estimator, or life curve, at any time is described by the following formula:

$$\hat{S}(t) = \prod_{t_i <= t} (1 - \frac{d_i}{n_i}) = \prod_{t_i <= t} (\frac{s_i}{n_i}) \qquad (1)$$

where 'd_i' is 'deceased' subjects or fatalities, and 's_i' is the 'survivor' subjects or alive ('censored') drivers/passengers, and 'n_i' is total subject number (total persons in study). There were 360 equal intervals, with the length of one minute each since crash (i=1 to 360) if the survivability within 6 hours was focused in this analysis. The sign of 'Π A_i' stands for the product of "$A_1A_2A_3$" if i=1 to 3.

In order to compare the traffic fatality relative risk or differences between different blocks or groups (such as earlier calls versus late calls), the Log-Rank test, compares the Kaplan-Meir life curves and obtains the statistical significance with p-value. The SAS Proc LifeTest is used for the calculation, and Kaplan-Meier estimator is also termed as 'Product-Limit Survival Estimates'. [7, 8]

3.1 Effect of Earlier Notification

In order to study the survival rates within 6 hours (study or research time) immediately following a crash, Table 3 is used to show the correlation between survival status and notification time, when all data (inj_sev = 3,4) are divided into a few groups based on notification time**.**

Table 3: Notification Time (min) versus Survival Status Within 6 Hours After Crash

Notification, N (minute)	Dead	Alive	Total	Alive % S(t)
N<=1 min	8772	9635	18,408	52.35
1<N <=2	2817	3137	5,954	52.69
2<N<=3	2266	2210	4,476	49.37
3<N<=5	3062	2928	5,990	48.88
5<N<=8	2339	2372	4,711	50.35
8<N<=15	2223	2453	4,676	52.46
15< N<=360	1773	2077	3,850	53.95
Total	23,252	24,812	48,064	51.62

Table 3 indicates that approximately 51% injury and fatality cases (24,362 out of 48,065) occurred within notification time <=1, 2 minutes (top two rows), and occupants also need EMS helps more than any other moments

during these crucial two minutes. However, many risk factors, such as notification time, EMS arrival and EMS quality, crash severity, health condition and age, may all contribute to occupant survival status. Particularly, the earlier notification within 1-2 minutes would significantly improve survival rates compared with later notifications of '3-15 minutes'. Although Table 3 also shows that the survival rate is relatively high (53.95%) for the smaller group of '15 <N<=360 minutes', this smaller group might be associated with less severity crashes, better health conditions or other factors. This smaller group survived earlier crash time window and also happened to notify later than others, and more investigations may be needed for this survival status variation. Again Figure 3, together with Table 3, indicates the majority of fatalities happened very early and 86.6% fatalities occurred during 0-100 minutes, and 61% fatalities within early 40 minutes.

Based on the same format of Table 2 Cohort design, 24,812 'Incapacitating Injury' cases were matched, within same time frame of 6 hours with 23,252 fatalities, and the total sample was then statistically 'randomized' (each case had the same probability) and 'blocked' (divided into two groups based on EMS notification time). The people with survival times longer than 6 hours were regarded as 'censored' data or alive within the current study time.

The status of 'alive' or 'censored' is also relative and changing over time (Table 4 or Figure 4). The total study sample can be divided into two blocks or groups: the *preferred* or *earlier* group is 'Call <=1 min after crash and call time before death time'; the rest belong to a second, *un-preferred* group, for the purpose of understanding the effect of earlier notification on fatalities. The survival rate difference between the two groups with earlier (<=1 min) or late (>1 min) notifications is then compared using two Kaplan-Meier life curves and Log-Rank test. Table 4 displays the survival rates of the two groups within the study time (6 hours post-crash). The p-value from Log-Rank test is under 0.0001 (p-value<0.0001).

Table 4: Survivors and Fatalities within 6 Hours After Crash
(Notifications <=1 versus >1 min, inj_sev=3, 4, FARS 2009-12)

Notification, (min)	Dead	Alive	Total	Alive % S(t)
<=1 min	8,772	9,635	18,407	52.34
>1 min	14,480	15,177	29,657	51.18
Total	23,252	24,812	48,064	51.62

Interpretation of Table 4:
The earlier notified group (<=1 min) had a cumulative survival rate (alive/total) of 52.34%, which is 1.16% higher than the late notified group (>1 min, 51.18%) within 6 hours after crashes. Hence, if the late group had made the EMS calls within 1 minute like the earlier group did, then the possible additional lives saved from this late group would be approximately 1.16% x (29,657) =344, this reduction of 344 deaths represents 1.48% of original death numbers of 23,252 within a time frame of 6 hours after crash during four years between 2009-2012, or 86 fatality reductions per year (the earlier study using 2005-2009 had a fatality reduction of 1.84% [1]). Furthermore, data with known notification and arrival times within 6 hour window is only 48.7% of the sample population (Table 1 and Figure 2). If we assume all sample populations (with or without info of notification/arrival, all sample populations are 1/0.487=2.05 times of the sample with known notification/arrival info) would share similar trends, then additional lives potentially saved could have been 177 (2.05 times of 86) per year from 2009-2012. The fatality relative risk of later group versus earlier group is 1.024, or later group has 2.4% higher relative risk of death with a significant P-value under 5%.

Again, Table 3 indicates that earlier notification within 1-2 minutes is very helpful to life saving, and EMS notification cut-off time of '1 minute', or '2 minutes' may lead to slightly different estimations of lives saved, which is discussed as Table 5 (Figure 4), where notification time is divided as two groups of 'notification <=2 min and call time before death time' (*preferred* or *earlier* group), or otherwise. The notification group with 'N <=2 min and call time before death time' would have larger sample size compared with the group of 'N<=1 min.' earlier as Table 4, If notification <=2 min., there were 84 cases that were with notification time and death time being 2 minutes, and that were not treated as the preferred group but otherwise. The similar analysis of Kaplan-Meier life curves, comparing the survival rates of earlier group versus later group, was performed for two notification time divisions, as Table 4 or Table 5. It can be seen, from Table 5, that the preferred earlier notified group had a cumulative survival rate of 52.61%, which is approximately 2% higher than the late notified group (50.62%). Figure 4 came from the two

survival probability curves over time of two different notification times (Table 5), the earlier notification groups is assumed as 'notification <=2 min and call time prior to death'; if 'notification <=2 min' instead, the cumulative survival rate difference for earlier and later groups would be slightly smaller (1.63%).

Table 5: Survivors and Fatalities Within 6 Hours After Crash (Notification<=2 or otherwise, inj_sev=3, 4 with FARS 2009-12**)**

Notification, (min)	Dead	Alive	Total	Alive % S(t)
<=2 min (preferred)	11,505	12,772	24,277	52.61
>2 min (non-preferred)	11,747	12,040	23,787	50.62
Total	23,252	24,812	48,064	51.62

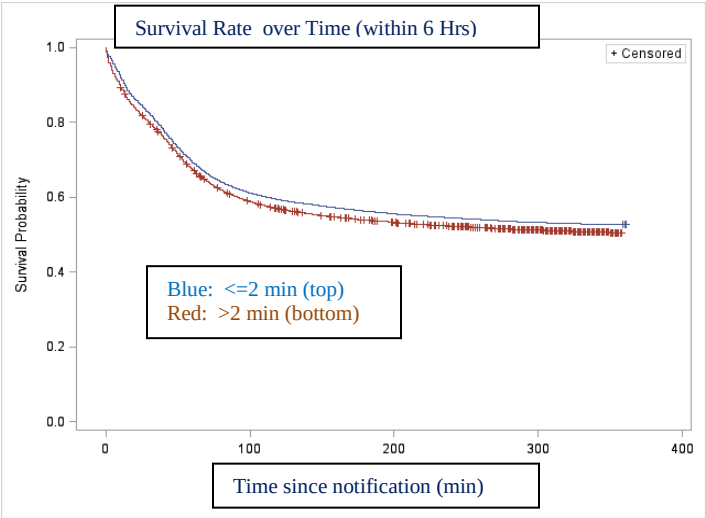

Figure 4: Notifications versus Survival Rate within 6 Hours after Crash (Notifications <=2 versus >2 min, inj_sev=3, 4)

Interpretation of Table 5 and Figure 4:
As seen in Table 5 and Figure 4, the preferred earlier notification group (<=2 min) had a cumulative survival rate (alive/total) of 52.61%, approximately 2% higher than the later notification group (>2 min) within 6 hours after crashes (P-value =0.0034). If the later notification group had made the EMS calls within 2 minutes as the earlier group, then the possible additional lives saved would be approximately 2% x (23,787) = 476 (approximately 2% reduction of original fatalities of 23,252) during 2009-12, or 119 fatality reductions per year. If all data with or without notification/arrival info are under consideration (the total population sample size is 1/0.487=2.05 times of the smaller sample with notification/arrival info), the additional lives saved due to earlier notification could be 244 annually during 2009-2012. The fatality relative risk of later group versus earlier group is 1.04, or later group has 4% higher fatality risk significantly.

Here are some discussions about the earlier notification effect and the analysis method:

- If the EMS cut-off time is longer than 6 hours in this study, the study population will be slightly larger than the population shown in Tables 4, 5. Although most people died within the first few hours as seen in Figures 3, 4, the proper EMS cutoff time depends on when the life curve becomes stabilized or flat after a crash.
- This method derived the fatality reductions or lives potentially saved due to ACN from crossing comparing the survival probabilities of two paired life curves at a specific time of 6 hours (360 minutes), and this comparison can also be made at any specific times chosen by researchers, 4, 5, or 6 hours, after a crash within the timeframe. Comparing survival rate difference of two paired groups at a specific time is a common approach used in clinical trials and public health research.
- The cut-off time of notifications <=1 or <=2 minutes also plays a role in determining the additional lives saved due to earlier notification (ACN), and Table 3 /Figure 4 show the notification within 1-2 minutes are most helpful.

3.2 Effect of Earlier EMS Arrival

Similarly, it is known that earlier EMS arrival may significantly improve occupant treatment and crash survivability, based on real-world data. The field-data also indicated that earlier notifications would not always guarantee either earlier arrivals or better survival chances, although there was a strong correlation between the EMS notification and EMS arrival (details to be discussed by using correlation coefficient). The EMS arrival was hence studied separately as one important variable for survival rate comparison.

Table 6 shows the correlation between the EMS arrival and survival status, and again Figure 3 life curve may be used together with Table 6: majority injuries and fatalities happened very early after crash (approximately 64% within 15 minutes after crashes as Table 6, top three rows). If EMS arrival is <= 5 minutes, the survival rate is 54.36%, which is 2.74% higher than the overall survival rate (51.62%). The smaller groups with '30< Arrival <=360 minutes', with approximately 11.7% of total occupants (bottom two rows), had a relatively high survival rate of 56% approximately, possibly due to less crash severity, better health conditions, or other unknown factors that are not explored in this study.

Table 6: Arrival Time versus Survival Status within 6 Hours After Crash

Arrival, A (min.)	dead	alive	Total	Alive % S(t)
A<=5	3063	3648	6,711	54.36
5<A<=10	6982	7180	14,162	50.70
10<A<=15	5074	4960	10,034	49.43
15<A<=30	5662	5878	11,540	50.94
30<A<=45	1467	1865	3,332	55.97
45<A<=360	1004	1281	2,285	56.06
Total	23,252	24,812	48,064	51.62

3.3 Effect of Earlier Arrival at Hospital

Similarly, an earlier arrival time to a hospital may significantly improve occupant medical treatment and crash survivability. Table 8 provides the correlation between the 'time-to-hospital' and 'survival status'. The survival rate with hospital arrival time (56.41%, Table 8) is approximately 5% higher than the overall survival rate, 51.62% (with and without hospital arrival information, as Table 3 or Table 6). Approximately 40% of occupants in this study, although with known notification and EMS arrival times within six hours, had no documented hospital arrival time. Table 8 does show the importance of reaching a hospital after crash overall, compared with Tables 3, 6.

Table 8: Time to Hospital versus Survival Status Within 6 Hours After Crash

Time to Hospital, H	Dead	alive	Total	Alive % S(t)
H<=15	115	152	267	56.93
15<H <=30	2087	2407	4494	53.56
30<H<=45	3551	4432	7983	55.52
45<H<=60	2972	3821	6793	56.25
60<H<=90	2761	3815	6576	58.01
91 to 360	1039	1584	2623	60.39
Total	12,525	16,211	28,736	56.41

4. CORRELATIONS AND RURAL-URBAN COMPARISON

The statistical results yielded from Kaplan-Meier life curves and 2x2 correlation tables, are very useful when examining one single factor a time. However, many factors, such as time of notification, time of arrival, injury severities, person's age, rural/urban areas, etc., may contribute to the fatality status simultaneously. Hence, the focus here is on the correlation between various EMS factors.

4.1 Correlation between EMS Factors

Correlations between the factors are commonplace, and earlier notification would normally result in earlier EMS arrival (correlation coefficient of 0.69 from overall rural and urban data of Table 9), and following Table 9 indicates, with several notification time groups, the correlation between notification and arrival.

Table 9: Correlation between notification (N) & arrival (A) including urban/rural crashes, inj_sev = 3, 4 (Correlation Coefficient = **0.69**)

A / N	A<=5 min	6-10 min	11-15 min	16-30 min	31-45 min	46-360 min	Total
N<=1	**5424**	**7493**	**3193**	1991	222	84	18,407
1<N <=2	**840**	**2688**	**1387**	906	111	22	5,954
2<N<=3	306	1801	1341	878	109	41	4,476
3<N<=5	140	1641	2062	1845	249	53	5,990
5<N<=8	1	505	1508	2252	353	92	4,711
8<N<=15	0	30	543	2912	968	223	4,676
15 -360	0	4	0	756	1320	1770	3,850
Total	6711	14,162	10,034	11,540	3,332	2,285	48,064

Table 9 (or Figure 5) indicates that the earlier notifications (within 2 minutes) would normally result in EMS arrivals within 15 minutes for 21,025 people (bold number), or 44% of all 48,064 cases.

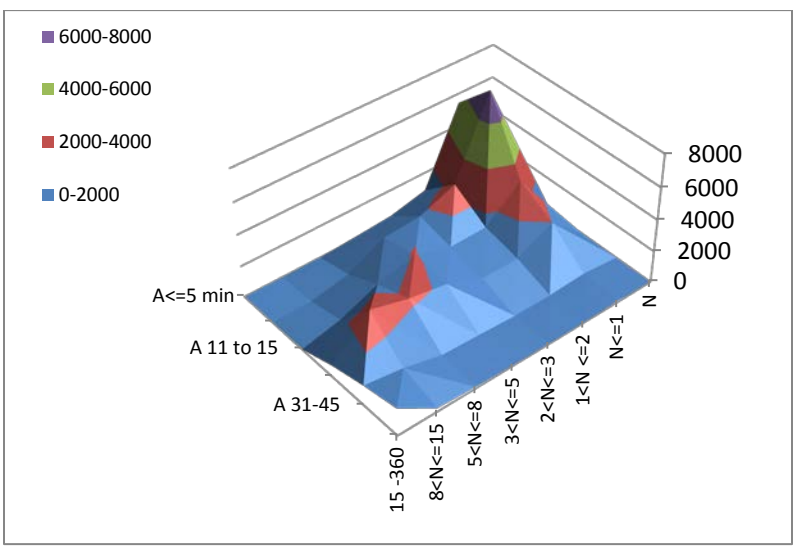

Figure 5: Correlation between notification (N) and arrival (A), and inj_sev=3,4

Urban areas, where over 61% of fatalities occurred, may differ in EMS responses, as shown in Table 1 (the average notification time is 7.25 minutes, and 4.61 minutes for rural and urban, respectively). The correlation between notification and arrival in rural area is different as following Table 10.

Table 10: Correlation between notification (N) and arrival (A) for rural cases (n=29,560)
(Correlation Coefficient = **0.67**)

A / N	**A<=5 min**	**6-10 min**	**11-15 min**	16-30 min	31-45 min	46-360 min	Total
N<=1	**2015**	**3831**	**2283**	1641	204	72	10046
1<N <=2	**311**	**1200**	**977**	756	103	32	3379
2<N<=3	112	823	908	717	99	36	2695
3<N<=5	60	796	1332	1481	211	49	3929
5<N<=8	1	197	815	1758	317	89	3177
8<N<=15	0	12	270	2057	791	199	3329
16 -360	0	1	0	457	1075	1472	3005
Total	2499	6860	6585	8867	2800	1939	**29560**

Table 10 indicates that earlier notification times (within 2 minutes) would result in 10,617 EMS arrivals within 15 minutes, or approximately 36% of all rural cases of 29,560 (bold, top 2 rows and left three columns). Table 11, using urban area data, indicates that similar earlier notification times (N<=2 minutes) would result in 10,384 EMS arrivals within 15 minutes (approximately 56% of all 18,445 urban cases). Hence, the rate difference of EMS arrivals within 15 minutes is 20% between urban and rural areas from Table 10 and Table 11. The correlation coefficient is 0.70 in urban area and stronger than 0.67 of rural area, and the EMS arrivals in urban area are much quicker than the rural areas.

Table 11: Correlation between notification (N) and arrival (A) for urban cases (n=18,445)
(Correlation Coefficient = **0.70)**

A / N	**A<=5 min**	**6-10 min**	**11-15 min**	16-30 min	31-45 min	46-360 min	Total
N<=1	**3403**	**3652**	**908**	345	16	12	8336
1<N <=2	**527**	**1484**	**410**	147	8	0	2576
2<N<=3	194	978	430	161	10	5	1778
3<N<=5	80	840	724	362	38	4	2048
5<N<=8	0	306	691	490	35	3	1525
8<N<=15	0	18	273	853	175	24	1343
15 -360	0	3	0	295	245	296	839
Total	4204	7281	3436	2653	527	344	**18445**

4.2 Multiple Relative Hazard Model

The goal of this aspect of the paper is to explore the relative comparison of passenger vehicle occupant survival rates with one risk factor alone or with several risk factors simultaneously. Cox [8] (1972) proposed a model to consider multiple risk factors simultaneously. The hazard function, *h(t)*, was introduced. Note, the hazard and survival probability functions, S(t) such as Figure 3, are closely related to each other, described by " $h(t) = - S'(t) / S(t)$ ", where S'(t) is the derivative of S(t) [1 8]. It can be seen that *h(t)* provides the relative change rate of S(t) over time, and *h(t)* reaches a higher positive value when S(t) dropped rapidly during 0-100 minutes after crashes (Fig. 3 and Fig. 4), and *h(t)* remains zero approximately when S(t) changes little beyond 100 minutes after crashes. Cox proposed that the hazard function can be further expressed in Equation (2), known as the Cox Proportional Hazard Model.[8] This model is to establish a relationship between the hazard function with multiple risk factors simultaneously, while the previously discussed Kaplan-Meier curves, S(t), explore a single risk factor only.[7]

In the current study using same data and notification definitions as Table 5 or Figure 4, the Proportional Hazard Model is used to study the effects of EMS notification together with the effects of occupant age and crash location on crash survivability. It may be impossible to include all risk factors in the current study. SAS Proc *PHREG* is used for calculation.[8 10]

$$h(t) = h_0 \exp(\beta_1 Age + \beta_2 Call + \beta_3 Location) \qquad (2)$$

The model included three factors treated as binary variables: age (over 60 or younger), notification time (later than 2 minutes or earlier notification) and crash location (rural versus urban). The results indicate that age and location are not significant risk factor with P-values of 0.13 and 0.27, respectively. Similar to prior findings in this paper, later crash notification (>2 min) could carry a 4% relatively higher fatality hazard than earlier group of 'notification within 2 minutes and call time prior to death time' (Hazard Ratio=1.04, p-value=0.0028). The arrival variable was not used in the above modeling to avoid the collinearity issue, since it is strongly correlated with notification. Many other risk factors, such as crash severity, occupant health condition, EMS arrival and service quality, et. al., may all contribute to the survival status and hazard ratio. Future investigations are needed to explore these issues, as this study focuses mainly on the time-related issue and notification. Of special interest is that the EMS arrival time in rural area (19.64 minutes, Table 1) is approximately 7.5 minutes later than urban area (12.10 minutes), and the correlation coefficient in rural area (0.67) is also weaker than urban area (0.70), however, the mean time to death for both urban and rural areas remain approximately the same (66 minutes), and more investigations would be necessary to explore this rural/urban difference and hazard patterns.

5. CONCLUSIONS

EMS data is closely associated with time, and 'time to event' data analysis, or survival analysis, is a suitable approach than some other statistical approaches. While FARS 2009-2012 data had limited information about EMS notification, EMS arrival and time to reach a hospital, the data did suggest certain meaningful patterns and facts:

- Earlier crash notification associated with Automatic Crash Notification (ACN) systems could save approximately 177 to 244 motor vehicle occupant lives per year (approximately 1.5% - 2% fatality reduction) when a time window of six hours after crash is considered, and the research population is targeted at 'Incapacitating Injury' and 'Fatal Injury' only. Meanwhile, many other confounding factors may also contribute to occupant survival probabilities.
- Effective ACN and earlier EMS arrival significantly improve crash survivability, and earlier notification (<=1 or 2 minutes) would generally result in the sooner EMS arrival within 5-15 minutes. Kaplan-Meier curves clearly demonstrate the survival differences of two paired groups whose EMS status differs, for example, the benefits associated with earlier notifications within 1-2 minutes (approximately 1.5- 2% fatality reduction within a timeframe of 6 hours after crash). The fatality reductions or lives potentially saved due to ACN are estimated from cross comparing the survival probabilities of two paired life curves at one specific time after crash.
- We did not discover a significant difference in survivability between age groups, and between urban and rural areas overall. However, the results indicate that there is a strong need to improve the EMS arrivals in rural area where the rate of EMS arrival within 15 minutes is 20% lower than the similar rate in urban area, the correlation coefficient between the notification and arrival is 0.70 in urban area, and 0.67 in rural area. Approximately 61% of fatalities happened in rural areas. Earlier EMS arrival within 5-15 minutes would be desired in both rural and urban areas.
- Correlations among various factors, such as notification time, time of EMS arival, time to hospital, and survival status are commonplace. Most injuries and fatalities occurred within a short time window of 1-100 minutes after crash (86.6% fatalities occurred out of all fatalities within six hours). Earlier notification time within 1-2 minutes would significantly improve survival probability, although many other confounding risk factors may contribute to the occupant survival status. EMS arrival time is very desired as soon as possible (best within 5 minutes), reaching a hospital within 15 minutes is desired, although hospital time data are rather limited in this study, the occupants with hospital arrival have significantly higher survival rates than the other occupants.

6. REFERENCES

1. Wu, J., Subramanian, R., Craig, M., Longthorne, A., (August, 2013), The effect of earlier or automatic collision notification on traffic mortality by survival analysis, Traffic Injury Prevention (2013) 14, Taylor & Francis, London, UK.
2. Kanianthra, J., Carter, A., & Preziotti, G., (2001). Enhancing post-crash vehicle safety through an automatic collision notification system. Proceedings of the 17th International Technical Conference on the Enhanced Safety of Vehicles, Amsterdam, The Netherlands.
3. Clark, D. E. and Cushing, B. M. (2002). Predicted effect of automatic crash notification on traffic mortality. Accident Analysis & Prevention 34 (2002) 507-513, Elsevier Science Ltd.
4. Lahausse, J. A., Fildes, B. N., Page, Y., & Fitzharris, M. P., (2008). The potential for automatic crash notification systems to reduce road fatalities. Proceedings of the 52nd Annual Conference of the Association for the Advancement of Automotive Medicine, San Diego, CA.
5. European Commission,(2009). Impact assessment on the introduction of the eCall service in all new type-approved vehicles in Europe, including liability /legal issues. http://ec.europa.eu/information_society/activities/esafety/doc/studies/ecall/ecall_final_report.pdf
6. Toyota (2011). EMS and Notification Study, Centers for Disease Control and Prevention – AACN and Field Triage of Injury Patients Update Meeting, November, 2011, Atlanta, Georgia.
7. Kaplan, E. L. and Meier, P. (1958). Nonparametric estimation from incomplete observations. Journal of the American Statistical Association, 261, 719-724.
8. Cox, D.R. (1972). Regression models and life tables – with discussions. Journal of the Royal Statistical Society, 34, 187-220.
9. Breslow, N. and Day, N. (1987). *Statistical methods in cancer research II: Analysis of cohort studies.* International Agency of Cancer Study, Lyon.
10. Allison, P. (1999), *Applied Survival Analysis using SAS*, SAS Institute, Cary, North Carolina, US.
11. Anders Longthorne, NHTSA (2012), Analysis of the Proximity of Fatal Motor Vehicle Crash Locations to the Availability of Helicopter Emergency Medical Service Response, DOT HS 811 542.

7. ACKNOWLEDGEMENT

Review comments from Rajesh Subramanian, Ellen Lee, and Chou-Lin Chen of NHTSA co-workers are appreciated. This paper is a U.S. Government work and may be copied and distributed without permission.